OIL & STEEL

AERIAL PLATFORMS

SPIDER BOOMS & SELF-DRIVE TRUCK MOUNTS



HIRD

MADE IN EUROPE

www.oilandsteel.co.uk



The Octopus range of spider booms are designed from the ground up.

- **Choice of power options** – low emission petrol, diesel or all electric
- **Powerful tracks** get you across landscaped or rough terrain areas to your worksite
- **Compact design** with narrow tracking mode width, for areas with confined access
- **Articulated jib** for precise, accurate platform positioning
- **Simple**, intuitive operator controls
- **Optional extras** such as non-marking tracks and water-air supply lines to platform

IPAF Operator training and expert technical assistance available

Octoplus 17

17m Max Working Height | **7.6m** Max Working Outreach

Octoplus 21

20.7m Max Working Height | **10.6m** Max Working Outreach

Octoplus 30

14m Max Working Height | **6.5m** Max Working Outreach



Non-Marking Tracks (optional)



Automatic Outrigger Stabilisation (optional)

Spider Booms



info@oilandsteel.co.uk

OCTOPLUS 17

The Oil&Steel Octoplus 17 spider platform delivers enhanced performance with a maximum working height of 17m and an extended maximum outreach of 7.6m.

Proportional controls allow the basket to be positioned quickly and precisely – and smart functions, including load/unload drive and a stablisation height of up to 625mm, make working at height in all conditions safer and more productive.

Power options

- Low emission petrol or diesel engine
- Bi-energy – petrol or diesel engine with a 73.6v mains electric motor
- Lithium battery



17m max working height

IPAF - Static Boom (1b)

Technical Specifications

Max Working Height:	**17m**
Platform Height:	**15m**
Max Working Outreach:	**7.6m**
Load Capacity:	**250kg**
Stowed Height:	**1980mm**
Stowed Length:	**4600mm**
Stowed Width:	**785mm** (without basket)
Basket Dimensions:	**L1400 x W700 x H1100mm**
Removable Basket	**Standard quick release**
Outrigger Footprint:	**2870mm x 2830mm**
Tracks:	**Fixed**
Power Source Options:	**Petrol or diesel (with 110v mains motor) Lithium battery**
Wireless Remote Control:	**Optional**
Total Machine Weight:	**2330kg**

Optional Accessories

- Non marking tracks
- Dual water / air line supply to basket



Available with non marking tracks



It looks great and it performs brilliantly – the Octoplus 17 has an unrivalled load capacity of 250kg and outreach of 7.6m

Working envelope

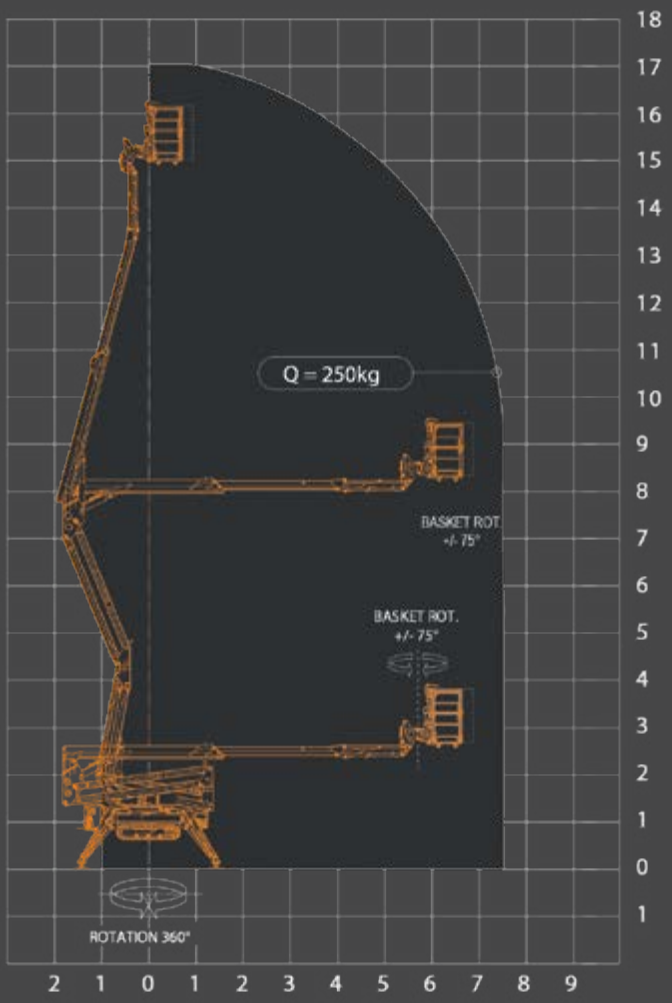

Dimensions

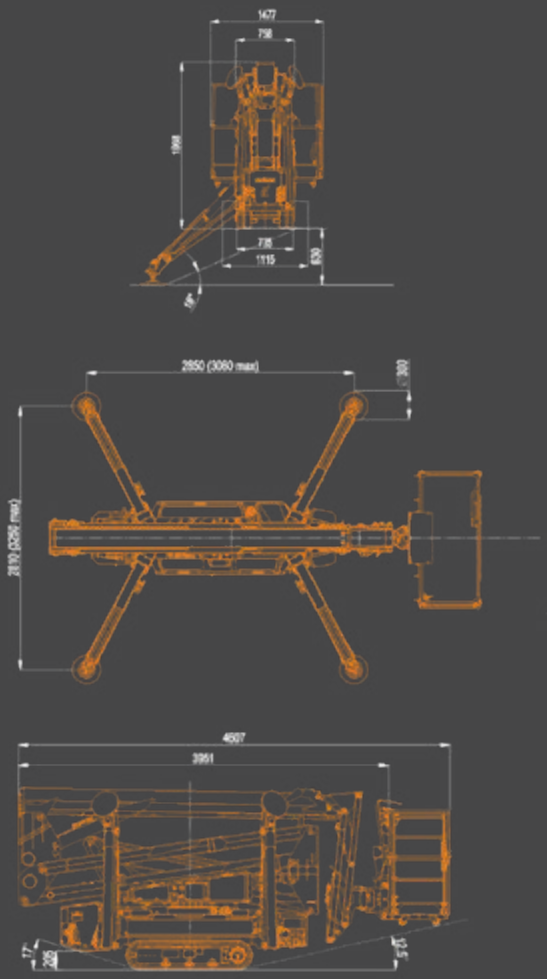

info@oilandsteel.co.uk

OCTOPLUS 21

The Oil&Steel Octoplus 21 is a next generation spider platform with a maximum working height of 20.7m and maximum outreach of 10.6m.

Just 785mm wide in tracking mode, it is ideal for working in confined spaces. The Octoplus 21 operates with ease across low load bearing ground and sensitive floors and is packed with features to support safety and productivity.



Power options

- Low emission petrol or diesel engine
- Bi-energy – petrol or diesel engine plus 73.6v mains electric motor
- Lithium battery

20.7m max working height

HIRD TRAINING

IPAF - Static Boom (1b)

IPAF

Technical Specifications

Max Working Height:	**20.7m**
Platform Height:	**18.7m**
Max Working Outreach:	**10.6m**
Load Capacity:	**250kg**
Stowed Height:	**1990mm**
Stowed Length:	**5900mm**
Stowed Width:	**785mm** (with basket)
Basket Dimensions:	**L1400 x W700 x H1100mm**
Removable Basket	**Standard quick release**
Outrigger Footprint:	**2900mm x 2900mm** (variable)
Tracks:	**Hydraulically extendable**
Power Source Options:	**Petrol, Diesel, Bi-energy, Lithium battery**
Wireless Remote Control:	**Optional**
Total Machine Weight:	**2850kg**

Optional Accessories

- Wireless radio remote (outriggers & drive functions)
- Non marking tracks
- Dual water / air line supply to basket
- Variable outriggers



Available with water / air line supply to basket



Exceptional ground clearance and a maximum working height of 21m – the Octoplus 21 delivers industry-leading performance

Working envelope

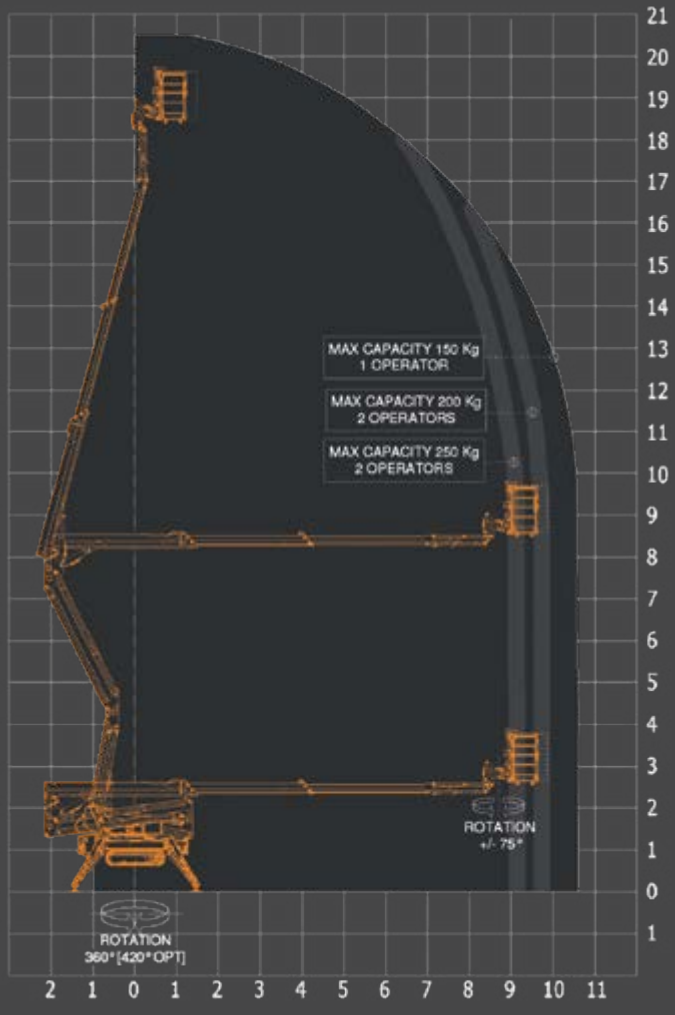

Dimensions

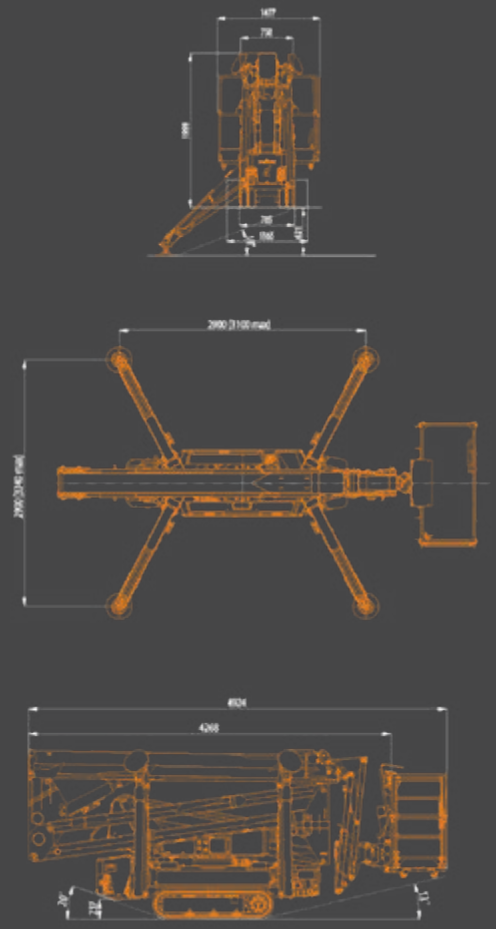

info@oilandsteel.co.uk

OCTOPUS 30

The Oil&Steel OctoPlus 30 is a next generation spider platform with a maximum working height of 29.6m and maximum outreach of 16.3m.

Just 900mm wide in tracking mode, it is ideal for working in confined spaces. The OctoPlus 30 operates with ease across low loadbearing ground and sensitive floors and is packed with features to support safety and productivity.

Power options

- Low emission petrol or diesel engine
- Bi-energy – petrol or diesel engine plus 73.6v mains electric motor
- Lithium battery



14m max working height

HIRD TRAINING

IPAF - Static Boom (1b)

IPAF

Technical Specifications

Max Working Height:	**29.6m**
Platform Height:	**27.6m**
Max Working Outreach:	**16.3m**
Load Capacity:	**280kg** (2 person restricted)
Stowed Height:	**1980mm**
Stowed Length:	**6470mm**
Stowed Width:	**900mm** (with basket)
Basket Dimensions:	**L1400 x W700 x H1100mm**
Removable Basket	**Standard via quick release**
Outrigger Footprint:	**4860mm x 4860mm**
Tracks:	**Fixed as standard**
Power Source Options:	**Petrol, Lithium battery**
Wireless Remote Control:	**Optional**
Total Machine Weight:	**4950kg**

Optional Accessories

- Wireless radio remote (outriggers & drive functions)
- Non marking tracks
- Dual water / air line supply to basket
- Variable outriggers



The OctoPlus 30 operates with ease across low loadbearing ground



The Octoplus 30 has a load copacity of 280kg (2 Persons restricted) working envelope

Working envelope

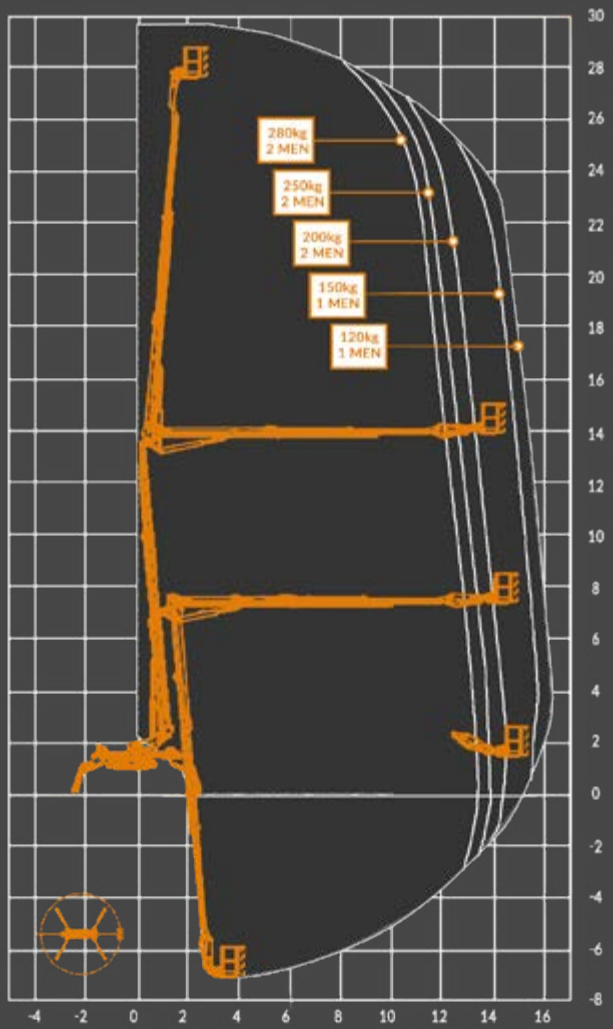

Dimensions

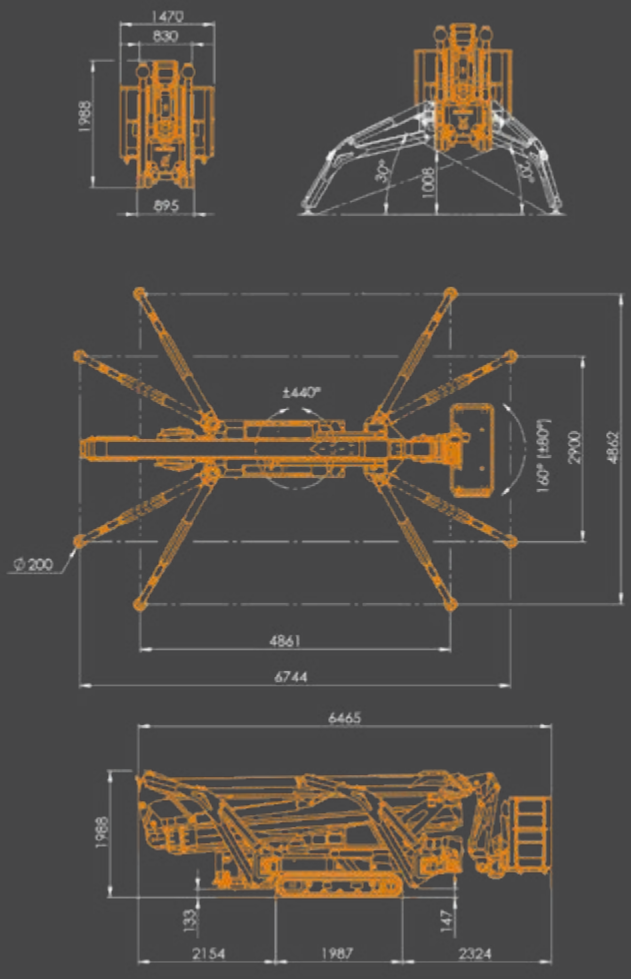

info@oilandsteel.co.uk



Self-Drive Truck Mounts

- **Snake articulated booms** or **Scorpion straight booms** with working heights up to 22.6m
- **Available on** IVECO or Ford Ranger chassis (Snake 147 only)
- **Spacious aluminium platform** with capacity for up to 2 people
- **Simple, proportional controls** are easy-to-use
- **Vehicle and platform options** such as fibre glass platform option for power cable work and electro-hydraulic outriggers

Ideal choice for building and premises maintenance and light installation tasks that can be rapidly deployed

Vehicles can be driven by anyone with a full car licence

Scorpion 1490 Max Working Height **14.2m**

Scorpion 1812 Max Working Height **17.8m**

Scorpion 2013 Max Working Height **19.9m**

Snake 2010H Max Working Height **20m**

Scorpion 2313 Max Working Height **22.6m**



Personalised Vehicle Livery Wrap (optional)



Chapter 8 Preparation (optional)

Truck Mounted



info@oilandsteel.co.uk

SCORPION 1490

The Scorpion 1490 truck mounted platform on an IVECO chassis has a telescopic boom providing a maximum working height of 14.2m and a maximum outreach of 9.2m.

Based on a truck with a 3.5t chassis, it can be driven and operated with a standard car licence, making it a popular choice for rental companies. The truck-mount platform has intuitive, proportional controls, making it easy to use.



14.2m max working height

IPAF - Static Boom (1b)

Technical Specifications

Max Working Height:	**14.2m**
Platform Height:	**12.2m**
Max Working Outreach:	**9.2m**
Load Capacity:	**225kg**
Stowed Height:	**2900mm**
Stowed Length:	**7500mm**
Stowed Width:	**2100mm**
Basket Dimensions:	**L1400 x W700 x H1100mm**
Outrigger Footprint:	**(Hydraulic) 2605mm x 3880mm**
Engine:	**2287cc Euro 6 D-temp**
Total Machine Weight:	**3270kg**

Optional Accessories

- Working lights chassis or basket
- Amber flashing led kit
- Chapter 8 high visibility markings
- Under-run side protection
- Personalised vehicle livery wrap
- Reversing camera
- Water / air line supply to basket
- Insulated fibre glass basket
- Cab air-con



Available with cab air-con



Scorpion 1490 has a telescopic boom that's operated by simple, intuitive proportional controls

Working envelope

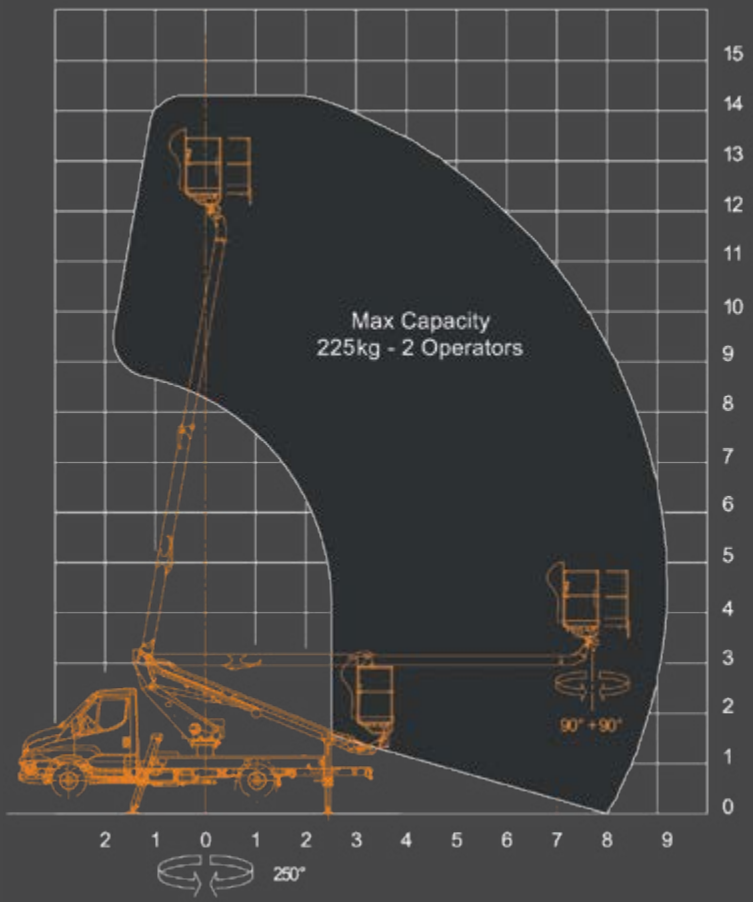

Dimensions

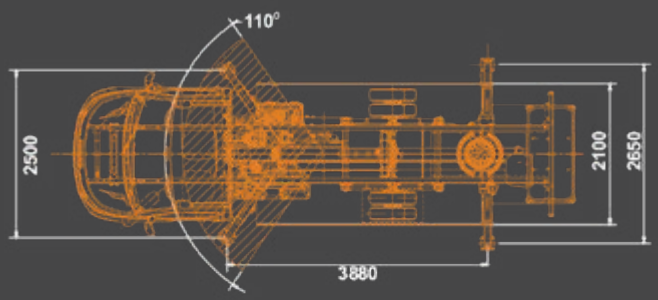

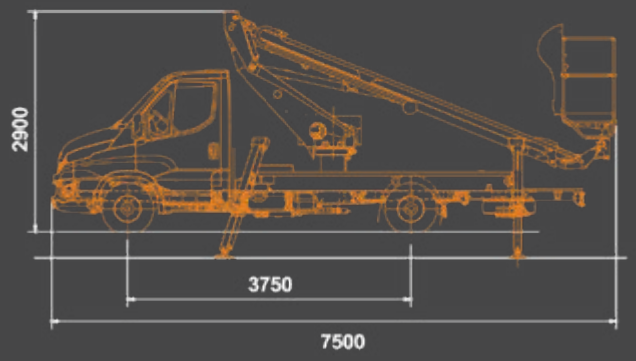

info@oilandsteel.co.uk

SCORPION 1812

The Scorpion 1812 truck mounted platform on an IVECO chassis has a maximum working height of 17.8m and a maximum outreach of 11.4m.

With a highly compact design and fast set up and stow functions, the Scorpion 1812 is ideal for working at height at multiple locations, for example for signage and lighting maintenance.

Smart digital controls enhance safety and productivity, while the basket's 225kg capacity means an operative can work with plenty of tools and materials.



17.8m max working height

IPAF - Static Boom (1b)

Technical Specifications

Max Working Height:	**19.8m**
Platform Height:	**17.8m**
Max Working Outreach:	**11.4m**
Load Capacity:	**225kg**
Stowed Height:	**2900mm**
Stowed Length:	**7018mm**
Stowed Width:	**2100mm**
Basket Dimensions:	**L1400 x W700 x H1100mm**
Outrigger Footprint:	**(Electro Hydraulic) 2660mm x 3850mm**
Engine:	**2287cc Euro 6 D-temp**
Total Machine Weight:	**3300kg**

Optional Accessories

- Working lights chassis or basket
- Amber flashing led kit
- Chapter 8 high visibility markings
- Under-run side protection
- Personalised vehicle livery wrap
- Reversing camera
- Water / air line supply to basket
- Insulated fibre glass basket
- Electro hydraulic outriggers
- Cab air-con



Available with under-run side protection



Like the other models, the Scorpion 1812 can be driven on a standard, full car driving licence

Working envelope

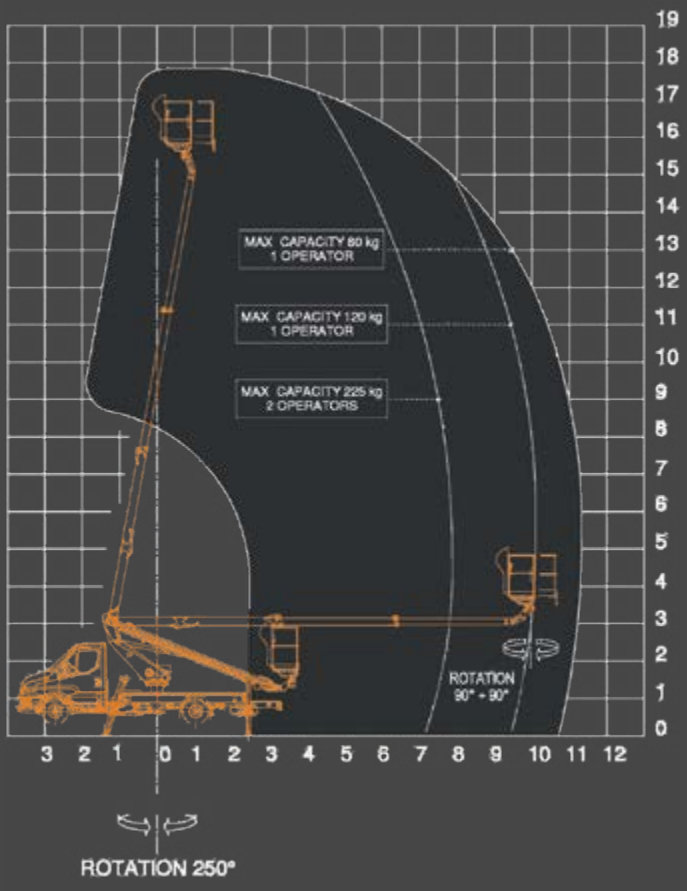

Dimensions

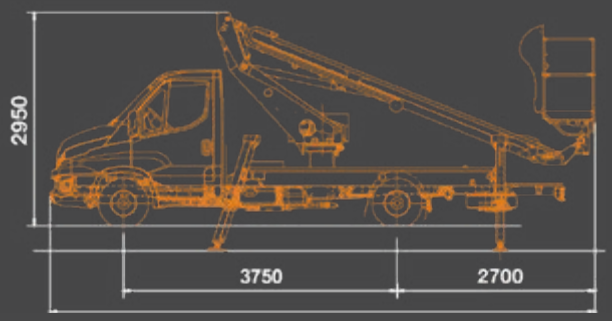

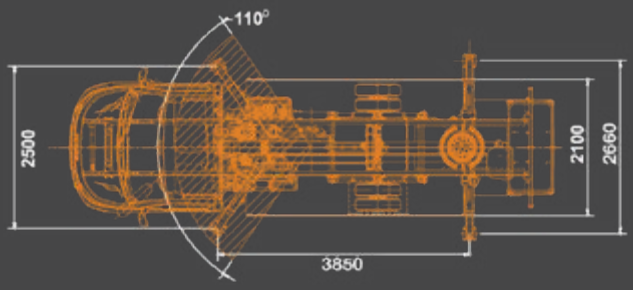

info@oilandsteel.co.uk

SCORPION 2013

The Scorpion 2013 truck mounted platform on an IVECO chassis has a telescopic boom providing a maximum working height of 19.9m and a maximum outreach of 12.5m.

Maximum basket capacity is an impressive 250kg at a restricted maximum working height of 19.5m. The Scorpion truck-mount system is designed to provide particularly fast set up and stow functions, boosting working at height productivity.



19.9m max working height

HIRD TRAINING

IPAF - Static Boom (1b)

IPAF

Technical Specifications

Max Working Height:	**19.9m**
Platform Height:	**17.9m**
Max Working Outreach:	**12.3m**
Load Capacity:	**250kg**
Stowed Height:	**2900mm**
Stowed Length:	**7018mm**
Stowed Width:	**2200mm**
Basket Dimensions:	**L1400 x W700 x H1100mm**
Outrigger Footprint:	**(Electro Hydraulic) 3165mm x 3820mm**
Engine:	**2287cc Euro 6 D-temp**
Total Machine Weight:	**3350kg**

Optional Accessories

- Working lights chassis or basket
- Amber flashing led kit
- Chapter 8 high visibility markings
- Under-run side protection
- Personalised vehicle livery wrap
- Reversing camera
- Water / air line supply to basket
- Insulated fibre glass basket
- Electro hydraulic outriggers
- Cab air-con



Available with under-run side protection



Like the other models, the Scorpion 2013 can be driven on a standard, full car driving licence

Working envelope

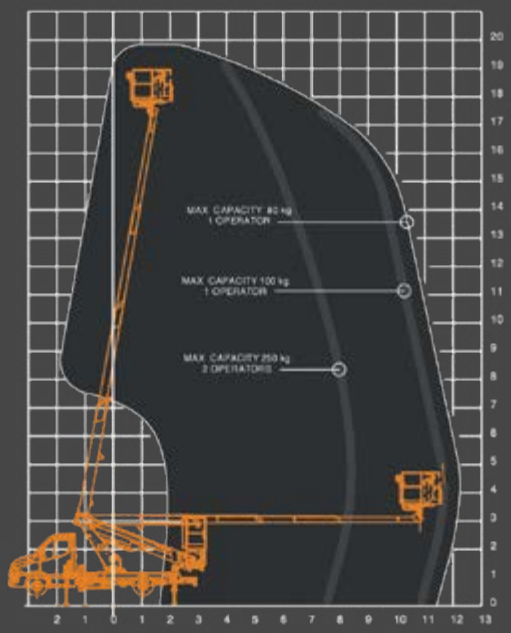

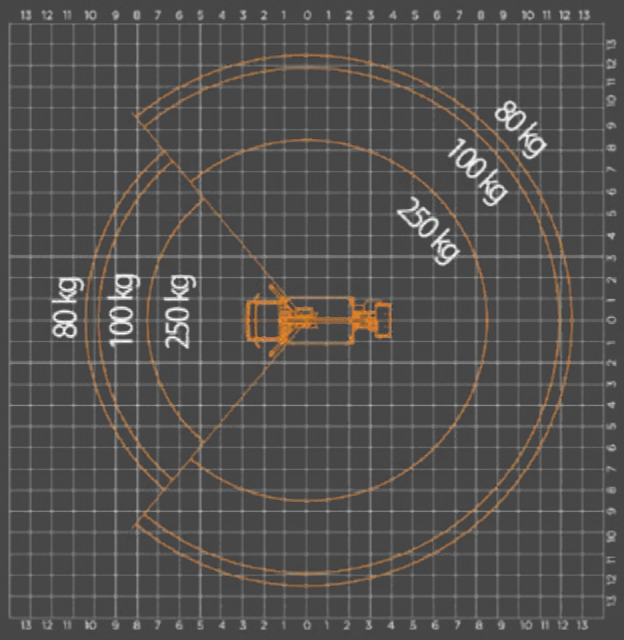

Dimensions

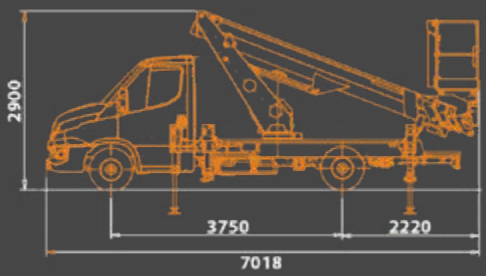

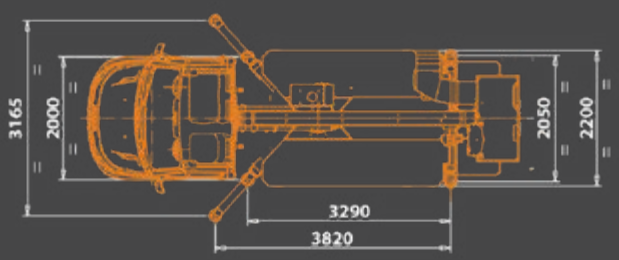

info@oilandsteel.co.uk

SNAKE 2010H

The Oil&Steel Snake 2010H Plus truck-mounted platform on an IVECO chassis provides a highly stable platform for working up to a maximum height of 20m, with a maximum working outreach of 10.2m.

Its large basket has a capacity of 250kg, allowing two people to work at height, or one person with plenty of tools and materials. The Snake 2010H truck mounted platform is ideal for a tasks that include building maintenance, telecommunications installation and maintenance, tree management and lighting maintenance.



20m max working height

HIRD TRAINING

IPAF - Static Boom (1b)

IPAF

Technical Specifications

Max Working Height:	**20m**
Platform Height:	**18m**
Max Working Outreach:	**10.2m**
Load Capacity:	**250kg**
Stowed Height:	**2650mm**
Stowed Length:	**6963mm**
Stowed Width:	**2110mm**
Basket Dimensions:	**L1400 x W700 x H1100mm**
Outrigger Footprint:	**(Manual Extensions*) 3140mm x 3390mm**
Engine:	**2287cc Euro 6 D-temp**
Total Machine Weight:	**3300kg**

Optional Accessories

- Working lights chassis or basket
- Amber flashing led kit
- Chapter 8 high visibility markings
- Under-run side protection
- Personalised vehicle livery wrap
- Reversing camera
- Insulated fibre glass basket
- Water / air line supply to basket
- Cab air-con

*NOTE outrigger vertical deployment is hydraulic as standard



Available with reversing camera



Snake 2010H Plus has an articulated boom providing flexible envelope of working heights up to 20m

Working envelope

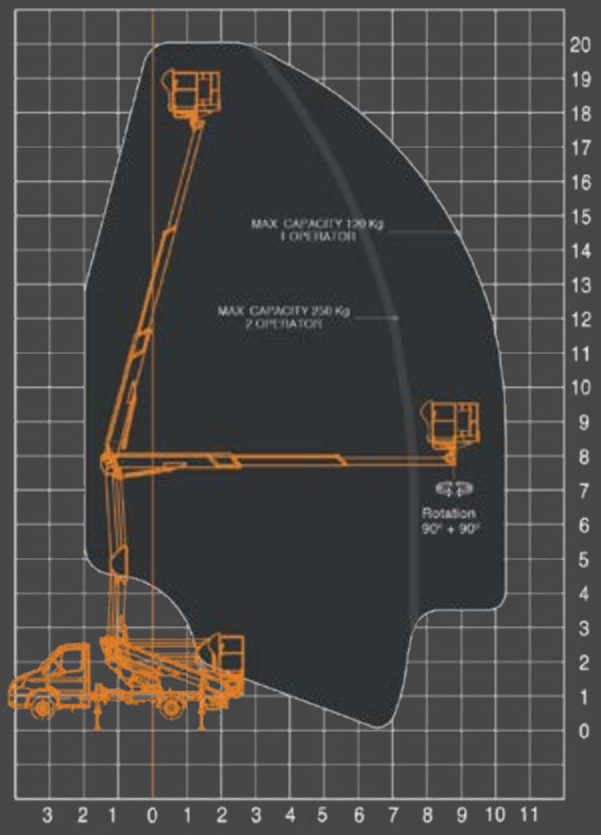

Dimensions

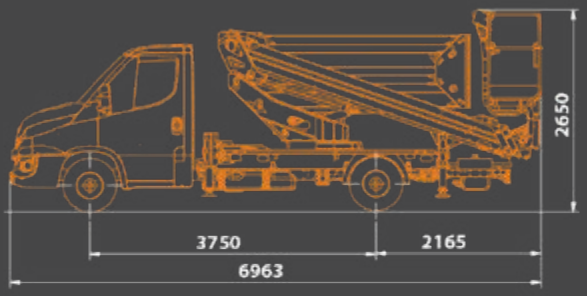

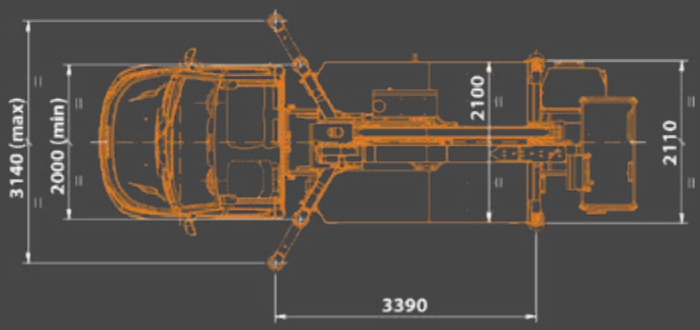

info@oilandsteel.co.uk

SCORPION 2313



The Scorpion 2313 truck mounted platform on an IVECO chassis has a telescopic boom providing a maximum working height of 22.6m and a maximum outreach of 12.2m.

It provides a load capacity of 250kg at a working height of just under 22m, allowing an operator to carry an impressive amount of tools and materials.

22.6m max working height

HIRD TRAINING

IPAF - Static Boom (1b)

IPAF

Technical Specifications

Max Working Height:	**22.6m**
Platform Height:	**20.6m**
Max Working Outreach:	**12.2m**
Load Capacity:	**250kg**
Stowed Height:	**2900mm**
Stowed Length:	**7650mm**
Stowed Width:	**2200mm**
Basket Dimensions:	**L1400 x W700 x H1100mm**
Outrigger Footprint:	**3165mm x 3815mm**
Engine:	**2287cc Euro 6 D-temp**
Total Machine Weight:	**3350kg**

Optional Accessories

- Working lights chassis or basket
- Amber flashing led kit
- Chapter 8 high visibility markings
- Under-run side protection
- Personalised vehicle livery wrap
- Reversing camera
- Insulated fibre glass basket
- Electro hydraulic outriggers
- Water / air line supply to basket
- Cab air-con



Available with water / air line supply to basket



The Scorpion 2313 self-drive truck mount has an extensive 12.3m working outreach

Working envelope

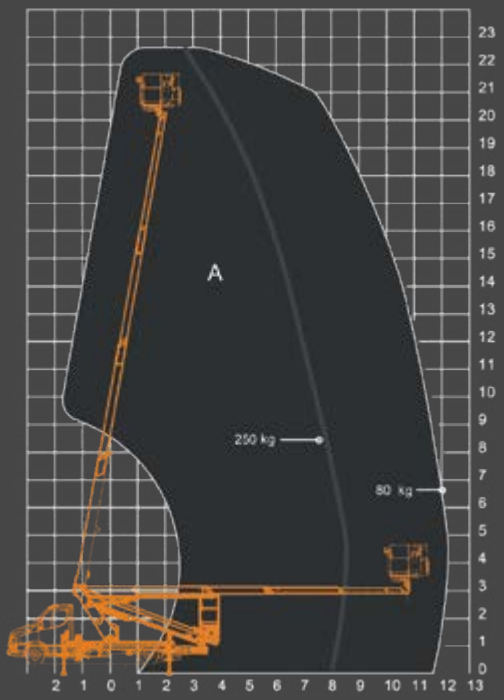

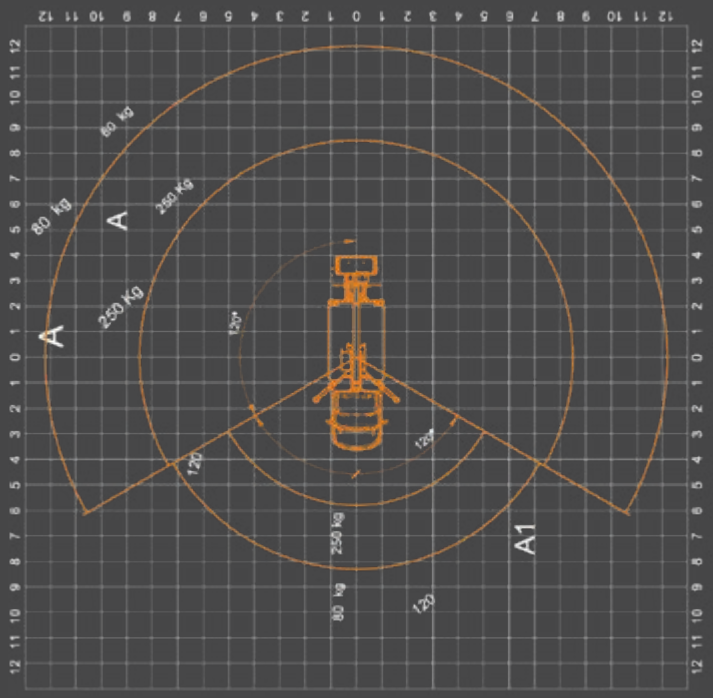

Dimensions

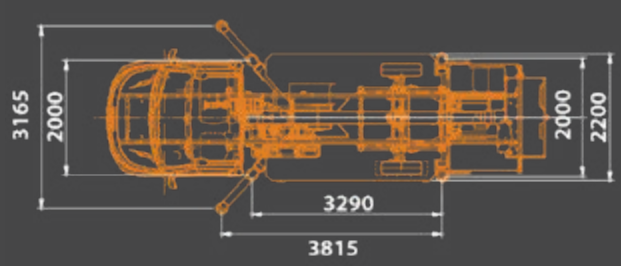

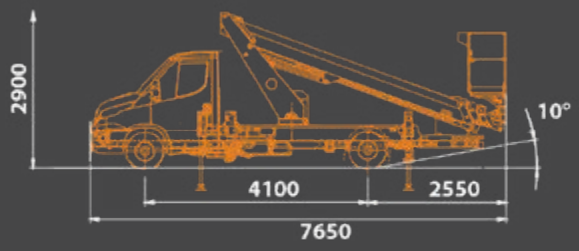

info@oilandsteel.co.uk



HIRD TRAINING

Static Boom Training Course (1b)

Course content includes:

- Awareness of health and safety regulation, accident prevention and control
- Safe operation of static self-propelled booms and their limitations
- Pre-use checks, inspection and function tests
- Route planning before operation of static self-propelled booms
- Manoeuvring the machine
- Setting up a static vertical platform for work
- Basic operational skills
- Selection and use of fall arrest equipment



Successful candidates receive a PAL (Powered Access Licence) photo ID card for the 1b category, which is valid for 5 years.

Contact Hird Training today

Telephone: 01482 481965. Email: training@hird.co.uk



After Sales Service

Oil&Steel's mission is to deliver excellent customer service

That includes supporting our customers so they always get the best out of their spider boom lifts and truck mounted platforms.

Our after-sales service is second to none – with fast and friendly expert technical advice always available.



Spare Parts and Service

That is backed up with a rapid spares service, a highly efficient maintenance and regulatory inspection (thorough examination) and full warranty back-up.



Service & Maintenance

Oil&Steel can provide high quality service and maintenance support for your spider platforms and truck mounted platforms in whatever configuration is best.

Our UK authorised distributor, Hird, operates a national team of mobile engineers who are fully-qualified and experienced in servicing all types of aerial platforms.

All engineers carry a stock of parts, and we can order other parts rapidly, so many maintenance tasks and can be carried out with a first-time fix.

info@oilandsteel.co.uk

OIL & STEEL







HIRD

Oil and Steel

info@oilandsteel.co.uk

Northern (Head Office)
English Street,
Hull HU3 2BS

Tel: +44 (0)1482 227333
Email: northern@hird.co.uk

Central
Shaw Lane Industrial Estate
Ogden Road, Doncaster
DN2 4SQ

Tel: +44 (0)1302 341659
Email: central@hird.co.uk

Southern
Unit 8, Redhill 23 Business Park
Holmethorpe Avenue,
Redhill RH1 2NB

Tel: +44 (0)203 174 0658
Email: southern@hird.co.uk

info@oilandsteel.co.uk